V180TI MARINE ENGINE

POWER RATING

Production tolerance : ± 3%

MODEL	CONDITIONS	POWER	rpm	Base Engine
V180TIH	HEAVY DUTY	600PS (441kW)	1,800	D2840LB
V180TIM	MEDIUM DUTY	650PS (478kW)	2,100	
V180TIL	LIGHT DUTY	820PS (603kW)	2,300	

Note : 1) No reduction in rating for intake air temperature is up to 45 °C (318K) and sea water temperature is up to 32 °C (305K) , relative humidity is up to 60 % all data are based on operation to ISO 3046.

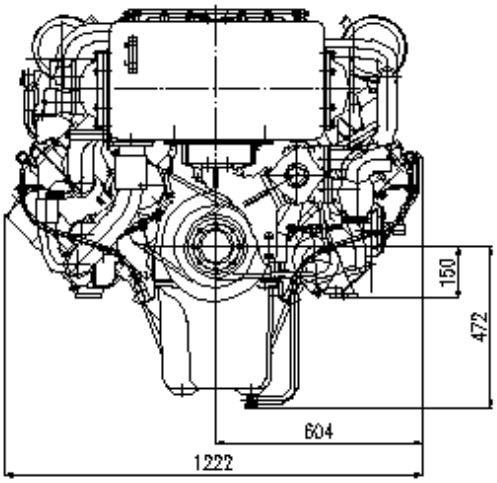

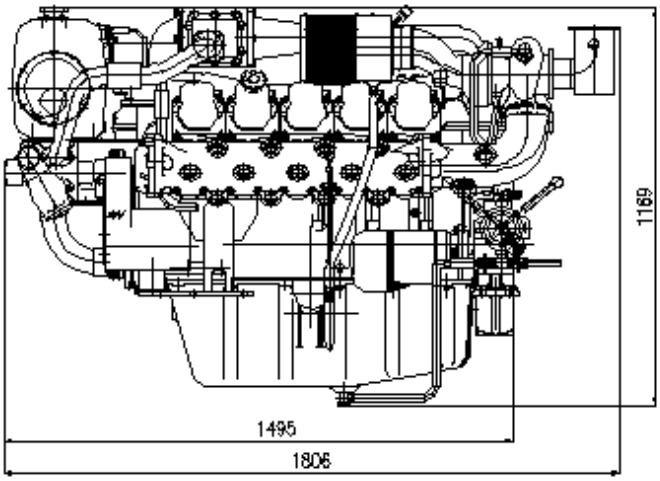

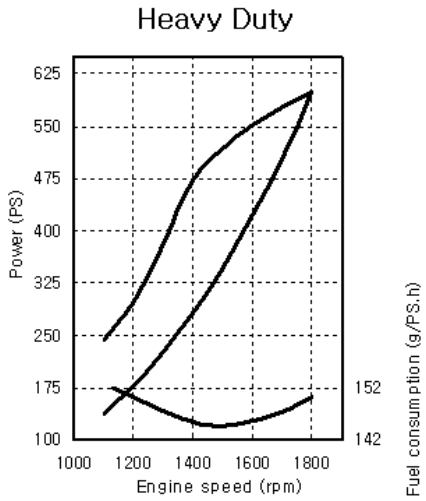

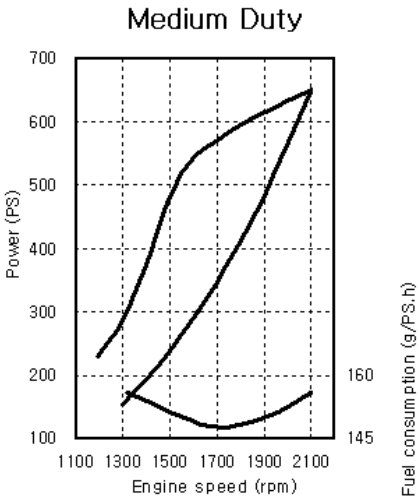

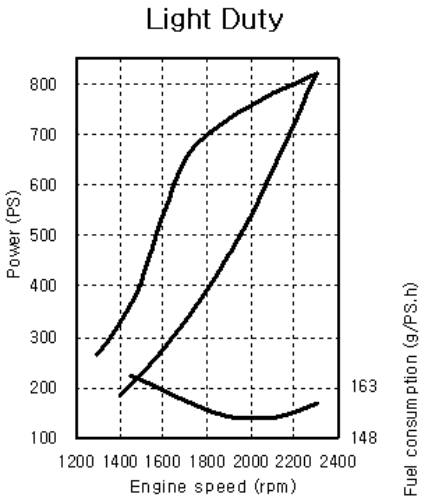

- **Heavy Duty :** Operation hours are unlimited per year, at average load is up to 90 %, at full load is up to 80 %
  Typical gearbox ratio: 2.5 ~ 6
  (Fishing trawler, Tug boat, Pushing vessel, Cargo boat, Freighter, Ferry)
- **Medium Duty :** Operation hours are up to 3,000 per year, at average load is up to 70 %
  At full load is (up to 30 % / 4hrs per 12 hour operation period)
  Typical gearbox ratio: 2 ~ 3.5
  (Fishing boat, Pilot boat, Escort boat, Passenger boat, Ferry, Cruising vessel)
- **Light Duty :** Operation hours are up to 1,000 per year, at average load is up to 50 %
  At full load is (up to 20 % / 2hrs per 12 hour operation period)
  Typical gearbox ratio: 1 ~ 2.5
  (Light weight fishing boat, Yacht, Coastguard boat, Fast boat, Fire pump, Navy)

V180TI MARINE ENGINE

Engine Specification

Model		Units	V180TIH	V180TIM	V180TIL
Engine type			4 cycle, V type, direct- injection, water cooled with wet turbo charger & inter-cooler		
Rating output (B.H.P)		PS(kW)/rpm	600(441)/1,800	650(478)/2,100	820(603)/2,300
Displacement		cc	18,273		
Cylinder number - bore(ϕ) x stroke		mm	10 - ϕ128 x 142		
Valve clearance at cold	In / Ex	mm	0.25 / 0.35		
Low idling rpm		rpm	725 ± 25		
No load max. rpm		rpm	below 2,070	below 2,415	below 2,645
Mean effective pressure		kg/cm^2	16.4	15.2	17.6
Mean piston speed		m/sec.	8.52	9.94	10.89
Compression ratio			15 : 1	15:1	14.6:1
Firing order			1 – 6 – 5 – 10 – 2 – 7 – 3 – 8 – 4 – 9		
Governor type of injection pump			Mechanical variable speed (R.Q.V)		
Fuel consumption		g / PS.h	150	156	158
		Lit / h	109	122	156
Injection timing (B.T.D.C)		deg	22 °± 1°	22 °± 1°	22 °± 1°
Starting system			Electric Starting by starter motor		
Starter motor capacity		V – kW	24 - 6.6		
Alternator capacity		V – A	24 - 50		
Battery		V – Ah	24 - 200		
Cooling system			Indirect sea water cooling with heat exchanger		
Cooling water capacity	Max. / Min.	lit.	92 / 81		
Fresh water pump type			Centrifugal type, driven by belt		
Sea water pump type			Bronze impeller type driven by belt		
Lubricating oil (Engine)	pan capacity	lit.	Max: 35, Min : 28 (Engine total : 38)		
	pressure	kg/cm^2	Full : 3.5, Idle : 1.2		
Direction of revolution	crankshaft		Counter clockwise viewed from stern side		
Engine Size (L x W x H)		mm	1,495 x 1,222 x 1,169		
Engine dry weight		kg	1,550	1,550	1,630

psi = kg/cm^2 x 14.22
lb/ft. = N.m x 0.737
kW = 0.2388 kcal/s

lb= kg x 2.205
lb/PS.h = g/kW.h x 0.00162
cfm = m^3/min x 35.3

hp = PS x 0.98635
U.S gal. = liter x 0.264

Head office
7-11, Hwasu-Dong, Dong-Gu, Incheon, Korea
TEL : 82-32-211-2246, 2248 FAX : 82-32-761-2759
Seoul Office
Doosan Infracore Co. Ltd.,
21st Floor, Doosan Tower, 18-12, Euljiro 6-ga, Jung-gu,
Seoul, Korea.
TEL : 82-2-3398-8521~8536 FAX : 82-2-3398-8509
Web site : www.doosaninfracore.com

※ **Specifications are subject to change without prior notice.**

Printed in November 2005 PS-SBM0745-E1F